LITTERMAID™

Automatic Self-Cleaning Litter Box

INSTALLATION, OPERATION AND USAGE MANUAL

IMPORTANT INFORMATION INSIDE!

Please read prior to product installation and operation.
Keep for future reference.

Smarthome.com, Inc. (800) SMART-HOME (949) 221-9200 http://smarthome.com

IMPORTANT SAFETY INSTRUCTIONS

- Not intended for use with kittens, unless they are capable of jumping in and out of the litter box on their own.
- Not intended for invalid, handicapped or very old cats.
- For cat use only! The Litter Maid Self-Cleaning Litter Box is intended solely for the safe elimination of cat waste. DO NOT ATTEMPT TO USE THIS PRODUCT FOR ANY OTHER PURPOSE.
- PREGNANT WOMEN and IMMUNE-DEFICIENT PEOPLE should avoid contact with cat waste at all times.
- CAUTION: THIS IS NOT A TOY. Litter Maid is a precision-operated appliance. You should avoid contact with moving rake during the cleaning operation.
- NEVER EXPOSE this Litter Maid product TO A WET ENVIRONMENT OR DIRECT SUNLIGHT.
- DO NOT ATTEMPT TO STOP rake at any time during operation.
- Should the rake become jammed, THIS UNIT HAS A MECHANISM THAT WILL AUTOMATICALLY STOP, REVERSE AND RESTART.
- Never allow small children or kittens to play in or around this device.

Please read all directions in this manual carefully prior to operating this product.

INSTRUCTIONS FOR USE

PRODUCT MAY VARY SLIGHTLY FROM ILLUSTRATIONS

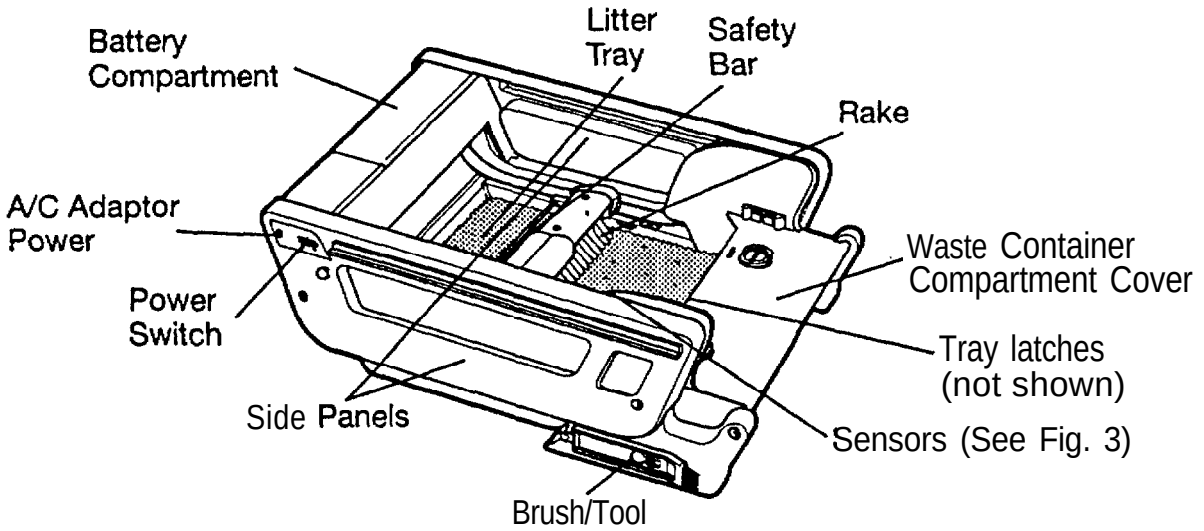

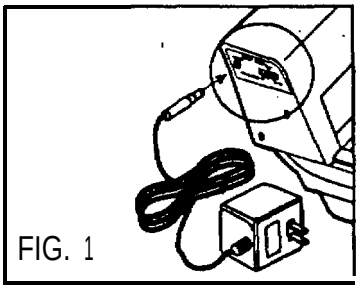
FIG. 1

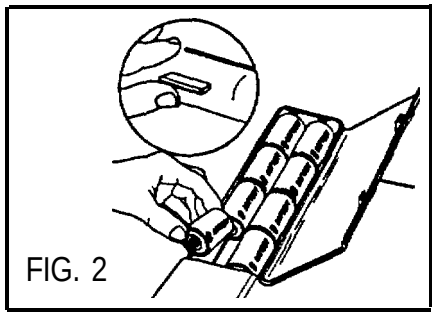
FIG. 2

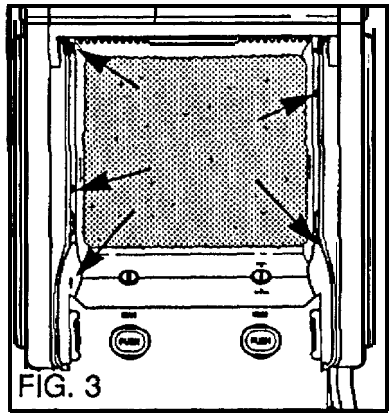
FIG. 3

Slide Power Switch to the **"OFF"** position. Plug in the A/C wall adapter (Fig.1) and/or install 8 "D"-cell batteries. To open battery compartment, press tabs on compartment side and lift off the top. Install batteries and close compartment {Fig. 2).

With batteries installed, if AC power fails unit will operate normally. If operated solely on batteries, power should last approximately 3 months, depending on usage and number of cats.

To insure proper operation, make sure Disposabte Waste Container is secured before use (Fig.4).

Fill the litter box with premium clumping litter up to the "FULL" line. DO NOT OVER-FILL. Do not pack it down. Add more litter when the litter level drops to the "ADD LITTER" line.

It is extremely important that a premium brand of clumping litter be used for proper operation.

Place the Litter Maid product in the same location as your former litter box. After your cat becomes accustomed to using the Litter Maid Self-Cleaning Litter Box, the location may be changed. Do not place the Litter Maid product in a wet environment or in direct sunlight.

Slide the power switch to the “ON ALARM” position. The unit will “beep” and the cleaning rake will go through a complete cleaning cycle. (If the “beep” bothers you or your cat, you may operate the unit in the “ON” position, which eliminates all alarms.)

The Litter Maid is then prepared for fully automatic operation. The unit will go through a complete cleaning cycle approximately 10 **minutes** after Litter Maid has detected that the cat has entered the litter box.

Should the cat reenter the box before 10 minutes have elapsed (clean cycle starts 10 minutes after cat initially leaves the box), the timer will automatically reset for an additional 10 minutes before engaging.

If the rake has started its initial travel, there is a feather-touch safety bar that will reverse the cycle if it makes contact with your cat.

ALARMS

When operating on batteries, one high-pitched “beep” will sound every 2 seconds, indicating that the batteries require replacement. This will continue until the batteries have been replaced, removed or have failed completely.

Alternating high/low “beeps” approximately every 5 seconds indicate that the waste container is missing, improperly installed or over-filled. Lifting the container lid automatically resets the alarm.

In the event of a power failure, or should your Litter Maid be disconnected for any reason and there are no batteries in the unit, then a series of beeps will sound indicating the unit is off due to the lack of power.

WASTE CONTAINER REPLACEMENT

When disposable Waste Container is full, it should be removed, cleaned out or disposed of and replaced.

Note: If the unit does not operate properly, reinstall waste container and lid.

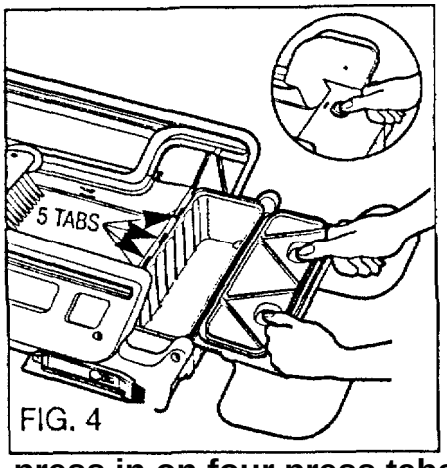

FIG. 4

TO REMOVE AND INSTALL TWO-PIECE CONTAINERS

TO REMOVE: Begin outside the waste container cover, by pushing rounded fasteners on the lid inward; then lift the cover and pull the edges of the container lid until they become detached from the cover. Waste container may be removed by pulling container edge free from tabs and lifting out.

You will need one container and one lid for each installation. **If you wish to reuse the container, remove it for cleaning. Reinstall container after cleaning. If you wish to dispose of container, press in on four press tabs at corners of lid to secure lid, and dispose** of **container.**

TO INSTALL DISPOSABLE CONTAINER: Insert waste container into receptacle area of the unit, making sure that the two notched corners of the container rest on the horizontal posts of the unit. Slip the edge of the waste container UNDERNEATH the five ridged tabs of the Litter Maid unit, making sure it snaps in place securely. (See inset Fig. 4).

TO INSTALL LID: Holding the waste container lid with the two round "fasteners" extending downward, insert the fasteners into the two round openings in the Litter Maid waste container cover. "PUSH" each fastener where indicated into the corresponding openings. (See inset Fig. 4).

Close waste container cover. The rounded fasteners will now extend upwards approximately 1/2 inch from the Litter Maid waste container cover. Push gently on the center of the fasteners, in order to secure the waste container cover in place. (See inset Fig. 4).

Your new disposable container is now installed and ready for your cat's use.

TO INSTALL LITTER GUARD RAMP

The litter guard ramp has two pivot pins. The Litter Maid unit has 2 holes located on the sides of the waste container end of the unit. Position the litter guard ramp with fabric side facing up, and the pivot pins pointed toward the waste container end of the Litter Maid. Lift the litter guard ramp and insert one of the pivot pins into a hole. Slightly stretch the other pivot pin to reach the other hole, then insert. {Fig. 5) Be careful not to overstretch. Tug slightly on litter guard ramp to assure ramp is secure.

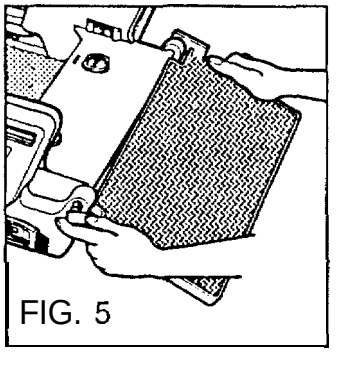
FIG. 5

CLEANING OF THE LITTER MAID

The five infrared sensors on the interior side panels need to be kept dust free. After changing or adding litter, wipe each infrared sensor with a soft, dry cloth to remove any dust that could hinder operation of the unit. (See Fig. 3, pg.3)

Cleaning of the Litter Maid Self-Cleaning Litter Box is not normally required; however, certain litters with inefficient absorption or marginal clumping ability may necessitate cleaning of the rake and litter box. **Turn off and unplug unit before cleaning with a damp cloth and mild detergent. Do not immerse the Litter Maid appliance in water. Tray can be removed for thorough cleaning.**

Litter guard ramp may be vacuumed or cleaned with a water-dampened cloth. Do not use soaps or chemical cleaners, as they may be harmful to your cat.

To empty and refill litter tray:

1. Unplug and turn off unit.
2. Rake must be in the initial position (close to the battery box).
3. Remove the brush/too\ from the side of the unit.
4. Shake litter slightly to uncover tray latches.
5. Using flat end of the brush/tool, unscrew tray latches at the waste container end of the litter box. (Fig. 6)
6. Depress lock button (located on the bottom outside of the tray, opposite the tray latches) and pull tray out. (Fig. 7, 8)
7. Dump out litter and wipe tray with a damp cloth. If further cleaning is necessary, removable tray can be washed with a mild detergent and water.
8. Slide tray back into unit until it snaps into place; then refill tray to fill line.
9. Use the brush/tool to lock lock tray latches back into position.
10. IMPORTANT: Wipe any dust off the sensors.
11. Plug in.

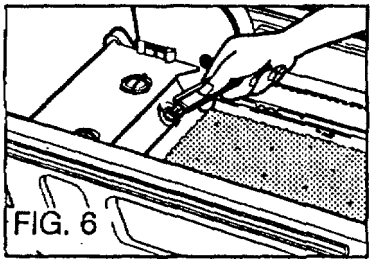
FIG. 6

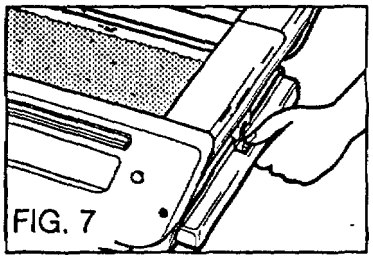
FIG. 7

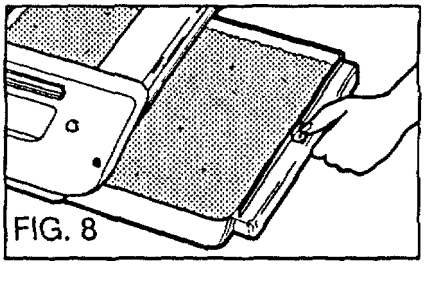
FIG. 8

TROUBLE SHOOTING

A. Unit does not operate when Power Switch is switched "On" or "On-Alarm."

Turn Power Switch to "Off" position. Check for correct battery installation or that unit is correctly plugged in. (It is best to plug unit in so that weak or dead batteries are eliminated as the cause of power failure.) Wait a few seconds, then slide the Power Switch to the "On-Alarm" position. The unit should go through a complete cleaning cycle.

B. Unit does not completely clean litter box.

This is most often caused by low-quality clumping litter. For best results, use only good or premium grades of clumping litter with Litter Maid product.

C. Unit is "beeping."

See section titled **Alarms,**

D. Unit rings "continuously." This can be caused by blocked sensors from litter or litter dust. To correct, clean dust off sensors or remove excess litter that may be blocking sensors. (See Figure 3 for location of sensors.)

ATTENTION!
PLEASE READ BEFORE REPLACING YOUR WASTE DISPOSABLE REFILL CONTAINERS

CONTRARY TO THE INSTALLATION INSTRUCTIONS IN YOUR USE AND CARE BOOK, THE WASTE CONTAINER INSTALLED IN YOUR LITTER MAID IS A

CLEAR ONE PIECE WASTE CONTAINER

PLEASE DISREGARD THE INSTRUCTIONS IN YOUR USE AND CARE BOOK AND FOLLOW THE INSTRUCTIONS AND ILLUSTRATIONS BELOW.

When the Reusable/Disposable Container is full, it should be removed, cleaned out or disposed of and replaced. To remove Container, place thumbs through the holes in Litter Maid cover and unsnap container from cover (FIG. 1)

When installing Container (FIG. 2), be sure that the top of the Container is securely hooked into the two tabs on the inside of the Litter Maid cover. Secure outside lip of the Container under the five tabs, as illustrated in FIG. 2. (Check to insure Container is installed properly by lifting Litter Maid cover. If Container is secured properly, it will not pop out of place.)

FOR INSTRUCTIONS ON HOW TO INSTALL ALL OTHER WASTE CONTAINERS YOU MAY HAVE RECEIVED, PLEASE REFER TO YOUR USE AND CARE BOOK

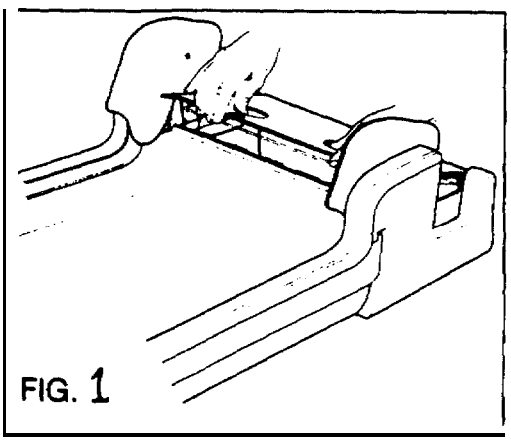

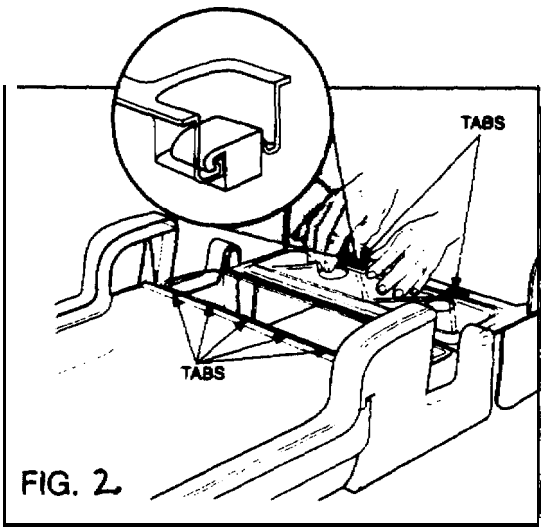

IMPORTANT NOTICE

Dear Litter Maid Customer:

A top quality clumping litter is required to ensure proper operation of your new Litter Maid self-cleaning litter box. We have found the following litters to work well:

TIDY SCOOP MULTIPLE CAT

PREMIUM CHOICE*

FRESH STEP SCOOP*

EVERCLEAN*

Testing the Quality of Your Clumping Cat Litter:

The above list is intended to serve as a guideline, since litter of the same brand name may vary from region to region. To test your brand, fill Litter Maid (or 9" x 9" pan) with 1 -1/2 inches of litter. Gently pour 1/2 cup of water into the center. Wait 3 minutes. Remove the clump. The clump should be no more than 3/4 an inch thick and should not break apart when you pick it up.

'These are trademarks of their respective companies

Smarthome.com, Inc. (800) SMART-HOME (949) 221-9200 http://smarthome.com